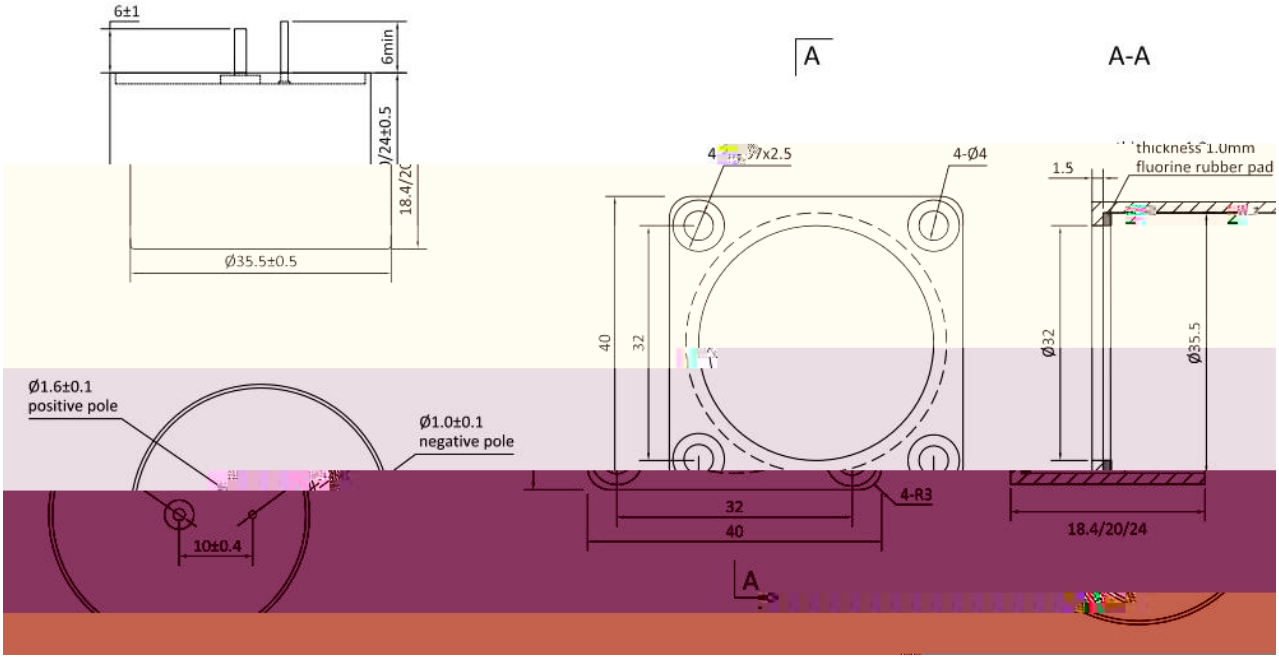
6±1
6min
24±0.5
18.4/20
Ø35.5±0.5
A
A-A
4-Ø4
1.5
fluorine rubber pad
40
32
Ø32
Ø35.5
Ø1.6±0.1
positive pole
Ø1.0±0.1
negative pole
10±0.4
4-R3
32
40
18.4/20/24
A

[redacted]